Published: 11-May-2011

Instrument Cluster - Instrument Cluster

Description and Operation

COMPONENT LOCATION - UK

Item	Part Number	Description
1	-	Tachometer
2	-	Engine temperature gage
3	-	Fuel level gage
4	-	Speedometer
5	-	Message center - high line instrument cluster only
6	-	Warning indicator lamp display - low line instrument cluster only

• NOTE: The 'Rest of World' instrument cluster is the same as the UK instrument cluster but does not have a miles per hour (mph) scale on the speedometer.

COMPONENT LOCATION - NORTH AMERICA

Item	Part Number	Description
1	-	Tachometer
2	-	Engine temperature gage
3	-	Fuel level gage
4	-	Speedometer
5	-	Message center - high line instrument cluster only
6	-	Warning indicator lamp display - low line instrument cluster only

OVERVIEW

The instrument cluster is located in the instrument panel, above the steering column. The instrument cluster comprises analogue gages and a number of warning indicator lamps to display system status. High line instrument clusters also feature a Liquid Crystal Display (LCD) message center to provide vehicle operation details to the driver. The message center is located in a central position in the high line instrument cluster.
For additional information, refer to: Information and Message Center (413-08 Information and Message Center, Description and Operation).
Low line instrument clusters feature warning indicator lamps in place of the message center.

ANALOGUE GAGES

Tachometer

The tachometer is located on the Left Hand (LH) side of the instrument cluster and displays engine speeds of up to 8000 Revolutions Per Minute (RPM) on petrol variants, and 6000 RPM on diesel variants. The tachometer is driven by an engine speed signal, which originates from the Crankshaft Position (CKP) sensor. This signal is transmitted over the high speed Controller Area Network (CAN) bus by the Engine Control Module (ECM). The Central Junction Box (CJB) acts as a gateway

and transmits the engine speed signal to the instrument cluster on the medium speed CAN bus. The signal is received by the instrument cluster microprocessor and the output from the microprocessor drives the tachometer.

Engine Temperature Gage

The engine temperature gage is located in the center of the instrument cluster and is driven by medium speed CAN bus messages from the CJB. The CJB receives an Engine Coolant Temperature (ECT) signal from the ECM over the high speed CAN bus when the vehicle enters power mode 6 (ignition on). The needle pointer position translates to the following approximate temperatures.

Engine Coolant Temperature °C (°F)		Pointer Position
Petrol	Diesel	
Ignition off	Ignition off	Park
40 (104)	40 (104)	Cold (blue segment)
75 (167)	75 (167)	Beginning of normal
119 (246)	113 (235)	End of normal
125 (257)	118 (244)	Beginning of hot (red segment)
130 (266)	123 (253)	End of hot

If the ECT signal rises above 118 °C (244 °F) on diesel vehicles, or 127 °C (260 °F) on petrol vehicles, the instrument cluster will illuminate the high ECT warning indicator. If the instrument cluster fails to receive an ECT signal from the CJB, the engine coolant temperature gage will move to the 'end of hot' position and the warning indicator will be illuminated.

Fuel Level Gage

The fuel level gage is located in the center of the instrument cluster and displays fuel tank contents when the vehicle is in power mode 6. When the ignition is switched off, the pointer returns to the park position.

Two Magnetic Passive Position Sensors (MAPPS) are located in the saddle type fuel tank, one on either side. The resistance values for both sensors are measured by the CJB through a series of hardwired connections. The CJB converts both values to medium speed CAN messages for delivery to the instrument cluster. The instrument cluster uses the 2 CAN bus messages to calculate the total amount of fuel in both halves of the tank. The instrument cluster will also damp the total fuel value to eliminate constant pointer movement due to fuel moving in the tank.

The following table shows the approximate fuel tank level and the respective needle pointer position.

Fuel Quantity Liters (US gallons)		Pointer Position
Petrol	Diesel	
0 (0)	0 (0)	Mechanical zero
1 (0.2)	2.5 (0.6)	Below empty
2.8 (0.7)	3.8 (1)	Indicated empty
11.9 (3.1)	10.3 (2.7)	Low fuel level indicator illuminated
13.9 (3.7)	12.3 (3.2)	Low fuel level indicator extinguished
16.9 (4.5)	16.7 (4.4)	Quarter full
33.8 (8.9)	33.4 (8.8)	Half full
50.8 (13.4)	50 (13.2)	Three quarters full
66.9 (17.7)	68 (18)	Indicated full
70.5 (18.6)	70.5 (18.6)	Over full

If the instrument cluster fails to receive the fuel level signals from the CJB the fuel level gage will move to the empty position and the low fuel level indicator will be illuminated.

Speedometer

The speedometer is located on the Right Hand (RH) side of the cluster and is available in 3 variants:

- Major scale mph, minor scale kilometers per hour (kph)
- Major scale kph, minor scale mph
- Major scale kph only.

The speedometer is driven by medium speed CAN bus signals transmitted by the CJB. The vehicle speed signal is provided to the CJB by the Anti-lock Brake System (ABS) module over the high speed CAN bus and is an average of all 4 wheel speed sensor signals.

The speedometer also incorporates the odometer.
For additional information, refer to: Information and Message Center (413-08 Information and Message Center, Description and Operation).

WARNING INDICATORS

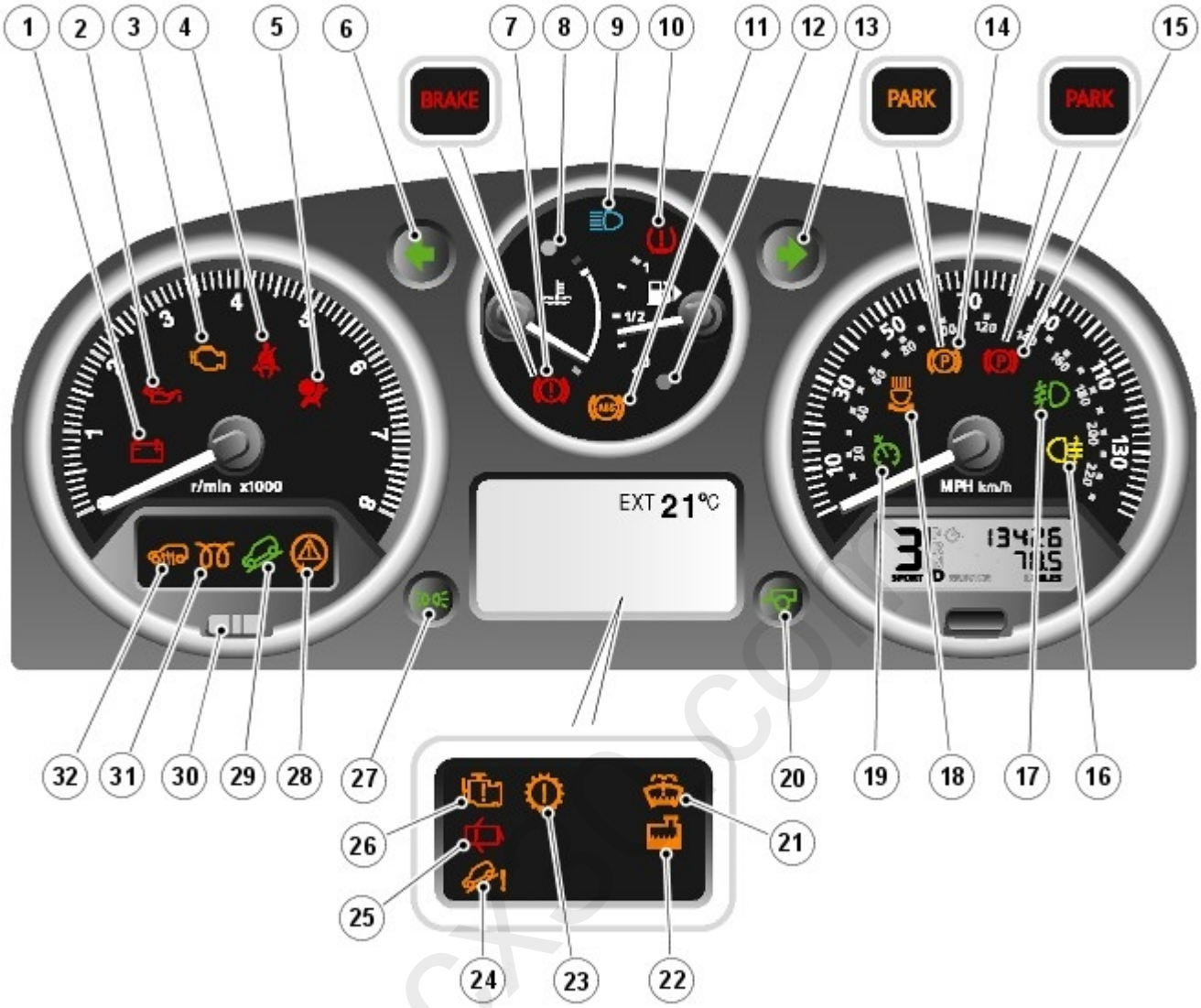

Item	Part Number	Description
1	-	Ignition/No charge indicator
2	-	Low oil pressure warning indicator
3	-	Malfunction Indicator Lamp (MIL) (petrol vehicles only)
4	-	Safety belt warning indicator
5	-	Supplemental Restraint System (SRS) warning indicator
6	-	Left Hand (LH) turn signal indicator
7	-	Brake warning indicator (low fluid/Emergency Brake Assist (EBA)/Electronic Brake force Distribution (EBD))
8	-	High Engine Coolant Temperature (ECT) warning indicator
9	-	Headlamp high beam indicator
10	-	Tire Pressure Monitoring System (TPMS) indicator
11	-	Anti-lock Brake System (ABS) warning indicator
12	-	Low fuel indicator
13	-	Right Hand (RH) turn signal indicator
14	-	Parking brake indicator - not used
15	-	Parking brake indicator
16	-	Rear fog lamp indicator
17	-	Front fog lamp indicator
18	-	Adaptive Front lighting System (AFS) indicator
19	-	Speed control indicator
20	-	Trailer indicator
21	-	Low washer fluid indicator (low line only)
22	-	Low engine coolant level warning indicator (low line only)

23	-	Transmission warning indicator (low line only)
24	-	Hill Descent Control (HDC) fault indicator (low line only)
25	-	Door open indicator (low line only)
26	-	Engine management system warning indicator (low line only)
27	-	Side lamp indicator
28	-	Dynamic Stability Control (DSC) indicator
29	-	HDC active indicator
30	-	Anti-theft alarm indicator
31	-	Glow plug indicator (diesel vehicles only)
32	-	Fuel fired booster heater indicator (if fitted)

The low line instrument cluster contains 39 indicators, the high line instrument cluster 27. The indicators in high line instrument clusters are supplemented by messages in the message center.
For additional information, refer to: Information and Message Center (413-08 Information and Message Center, Description and Operation).

The warning indicators can be split into 2 groups; self controlled and externally controlled. Self controlled warning indicators are dependent on software logic within the instrument cluster for activation. Externally controlled indicators are supplied with current from another system controlling module or illuminated by the instrument cluster on receipt of a medium speed CAN bus message from the CJB.

Ignition/No Charge Indicator

The ignition/no charge indicator is controlled by the instrument cluster software and illuminated by medium speed CAN bus signals from the ECM via the CJB. The indicator illuminates in a red color when the vehicle enters power mode 6 and is extinguished when the engine is started.

If the indicator remains illuminated after the engine has started or illuminates when driving, the alternator charge output has failed.

Low Oil Pressure Warning Indicator

The low oil pressure warning indicator is illuminated by the instrument cluster on receipt of a medium speed CAN bus signal from the CJB. The signal originates in the ECM and is generated by the engine oil level sensor on petrol vehicles and the engine oil pressure sensor on diesel vehicles.

The indicator illuminates in a red color when the vehicle enters power mode 6 for a 3 second bulb check. If the bulb subsequently illuminates when the engine is running, the engine should be stopped immediately it is safe to do so.

Malfunction Indicator Lamp

The Malfunction Indicator Lamp (MIL) is illuminated by the instrument cluster on receipt of a medium speed CAN bus signal from the CJB. The signal originates in the ECM and is generated if an On-Board Diagnostic (OBD) fault has been detected which will cause excessive emissions output. This may relate to either an engine management or transmission fault.

The MIL is illuminated in an amber color when the vehicle enters power mode 6 for a 3 second bulb check. The bulb check in this instance is carried out by the ECM via the CJB, not the instrument cluster. If the MIL subsequently illuminates the vehicle should be interrogated using the Land Rover approved diagnostic system at the earliest opportunity.

Safety Belt Warning Indicator

The safety belt warning indicator will illuminate in a red color on receipt of a medium speed CAN bus signal from the CJB. The signal originates in the Restraints Control Module (RCM), which monitors the status of the occupant classification system and switches located in the safety belt buckles.

Three variations of warning are available depending on vehicle configuration:

- Reminder (all vehicles except North American Specification (NAS) vehicles)
- Federal Motor Vehicle Safety Standard (FMVSS) 208 reminder (NAS vehicles only)
- Belt Minder

The conditions for safety belt warning indicator illumination are as follows:

Reminder

- Vehicle in power mode 6
- Drivers safety belt not secured in its buckle
- Large passenger detected in front passenger seat with an unsecured safety belt.

The warning indicator will remain illuminated until either the ignition is switched off or conditions 2 and 3 no longer exist.

FMVSS-208 Reminder

- Vehicle in power mode 6
- Drivers safety belt not secured in its buckle.

The warning indicator will remain illuminated for 65 seconds and will be accompanied by a single 6 second chime from the instrument cluster sounder.

• NOTE: The warning indicator and chime will not activate if these conditions arise 75 seconds after the vehicle has entered power mode 6.

The warning indicator will be extinguished and the sounder cancelled if the ignition is switched off or the driver's safety belt is secured in its buckle.

Belt Minder

- Vehicle in power mode 6 (all vehicles except NAS vehicles)
- Vehicle in power mode 6 for 75 seconds (NAS vehicles only)
- Vehicle speed is greater than 6 mph (10 kph)
- Drivers safety belt not secured in its buckle
- Large passenger detected in front passenger seat with an unsecured safety belt.

The warning indicator will flash at a frequency of 2 Hz while accompanied by a chime from the instrument cluster for 10 seconds. This is followed by a 10 second period where the warning indicator is permanently illuminated and the sounder is silent. This 10 second cycle will be repeated for a maximum of 190 seconds or any of the conditions listed above cease to exist.

Supplemental Restraint System Warning Indicator

The Supplemental Restraint System (SRS) warning indicator is illuminated on receipt of a medium speed CAN bus signal from the CJB. The signal originates in the RCM which monitors the condition of the SRS and illuminates the red warning indicator accordingly.

The SRS warning indicator is illuminated by the RCM for a 6 second bulb check when the vehicle first enters power mode 6. If a fault is detected with the indicator, the instrument cluster returns a medium speed CAN bus signal via the CJB to the RCM and a Diagnostic Trouble Code (DTC) is stored in the RCM's memory. The message 'SrS' will also be displayed in the odometer.
For additional information, refer to: Information and Message Center (413-08 Information and Message Center, Description and Operation).

Left and Right Hand Turn Signal Indicators

The green left and right hand turn signal indicators are illuminated on receipt of medium speed CAN bus signals from the CJB. The CJB provides a CAN bus signal with one of the following values:

- 0 - LH steering column multi-function switch in the central position
- 1 - LH steering column multi-function switch in the LH turn position
- 2 - LH steering column multi-function switch in the RH turn position
- 3 - Hazard flashers requested.

If the vehicle is in power mode 6 the instrument cluster will flash the appropriate turn signal indicator if a medium speed CAN bus signal is received with a value of 1 or 2. Medium speed CAN bus signals with a value of 3 will activate both the LH and RH turn signal indicators simultaneously irrespective of power mode.

When activated, the left and right hand turn signal indicators will be accompanied by 'tick tock' chimes from the instrument cluster sounder.

Brake Warning Indicator

EBA and EBD warnings are transmitted to the CJB from the ABS module over the high speed CAN bus. These signals are relayed to the instrument cluster on the medium speed CAN bus and will activate the brake warning indicator when the vehicle is in power mode 6. If an EBA warning is requested, the indicator will illuminate in an amber color. If an EBD warning is requested, the indicator will illuminate in a red color.

Low brake fluid level warnings are also transmitted to the instrument cluster from the CJB on the medium speed CAN bus. The signal originates in the ABS module which receives a hardwired input from the brake fluid level sensor. If a low brake fluid warning is requested, the indicator will illuminate in a red color when the vehicle is in power mode 6.

The brake warning indicator is also subject to a 3 second bulb check when the vehicle first enters power mode 6. The indicator will illuminate in a amber color for 1.5 seconds then a red color for 1.5 seconds.

High Engine Coolant Temperature Warning Indicator

The red high Engine Coolant Temperature (ECT) warning indicator is controlled by the engine temperature gage software (see above).

Headlamp High Beam Indicator

The blue headlamp high beam indicator is illuminated on receipt of a medium speed CAN bus signal from the CJB. The signal originates in the light switch module and is transmitted to the CJB over the LIN bus. The instrument cluster will only illuminate the headlamp high beam indicator when the vehicle is in power mode 6 and the LH steering column multi-function switch is moved to the high beam position.

Tire Pressure Monitoring System Indicator

The Tire Pressure Monitoring System (TPMS) indicator is controlled by the instrument cluster on receipt of medium speed CAN bus signals from the CJB. The signal originates in the TPMS module. The indicator is illuminated in an amber color for a 3 second bulb check by the TPMS module when the vehicle enters power mode 6. If the indicator remains illuminated or flashes after the engine is started or when driving, the TPMS has developed a fault. The tire pressures should be monitored manually until the fault is rectified.
For additional information, refer to: Wheels and Tires (204-04 Wheels and Tires, Description and Operation).

Anti-lock Brake System Warning Indicator

The Anti-lock Brake System (ABS) warning indicator is controlled by the ABS module which transmits a high speed CAN bus message to the CJB. The CJB relays the message to the instrument cluster over the medium speed CAN bus. The warning indicator is illuminated in an amber color for 3 seconds for a bulb check by the ABS module when the vehicle enters power mode 6. If the warning indicator remains illuminated or illuminates when driving, an ABS fault has occurred and the ABS function will not be available.

During the bulb check, if the warning indicator comes on for 0.5 second, then goes off for 0.5 second and is then

illuminated for the remaining 2 seconds of the bulb check, this indicates that faults are stored in the ABS module memory.

If the warning indicator was illuminated due to a wheel speed sensor fault, the indicator will remain illuminated at the next ignition cycle, even if the fault is rectified. When the vehicle is driven above a speed of 20 km/h (12.5 mph) the indicator will be extinguished. This allows the ABS module to perform a thorough check of the system and to establish that the output from the replaced sensor is correct.

Low Fuel Level Indicator

The low fuel level indicator is controlled by the fuel level gage software (see above). When the vehicle enters power mode 6, the low fuel indicator is illuminated in an amber color for a 3 second bulb check. If the fuel level gage software determines the low fuel indicator should be illuminated, it flashes the indicator at a rate of 2 Hz for 5 seconds. The first flash is accompanied by a chime from the instrument cluster sounder. After the 5 second flashing period the indicator will remain illuminated until fuel is added to the tank or the vehicle ignition is switched off.

Parking Brake Indicator

The red parking brake indicator is illuminated on receipt of a medium speed CAN bus signal from the CJB. The signal originates in the parking brake microswitch, which is hardwired to the CJB. The parking brake indicator will only illuminate if the parking brake is applied and the vehicle is in power mode 6.

Rear Fog Lamp Indicator

The rear fog lamp indicator is illuminated on receipt of a medium speed CAN bus signal from the CJB. The indicator is illuminated in an amber color if the vehicle is in power mode 6 and rear fog lamp operation has been requested.

Front Fog Lamp Indicator

The front fog lamp indicator is illuminated on receipt of a medium speed CAN bus signal from the CJB. The indicator is illuminated in a green color if the vehicle is in power mode 6 and front fog lamp operation has been requested.

Adaptive Front Lighting System Indicator

The Adaptive Front lighting System (AFS) indicator is controlled by the AFS module. The AFS module is hardwired to the CJB, which relays signals to the instrument cluster over the medium speed CAN bus. When the vehicle enters power mode 6, the AFS indicator is illuminated in an amber color for a 3 second bulb check. If during AFS operation a fault is detected, the AFS indicator will flash at a frequency of 2 Hz.

Speed Control Indicator

The speed control indicator is controlled by the ECM, which transmits a speed control active signal to the instrument cluster via the CJB. The indicator will illuminate in an amber color when the vehicle is in power mode 6 and speed control is active.

Trailer Indicator

The trailer indicator is controlled by the instrument cluster on receipt of medium speed CAN bus signals from the CJB. When a trailer is connected to the vehicle electrical system and the turn signal indicator switch is operated, the CJB transmits a signal to the instrument cluster to operate the trailer indicator. The instrument cluster software controls the flash rate of the indicator which flashes in a green color. The trailer indicator flashes slowly, at the same rate as the turn signal indicators.

Low Washer Fluid Indicator

The low washer fluid indicator is illuminated on receipt of a medium speed CAN bus signal from the CJB. The signal originates in the low washer fluid level switch, which is hardwired to the CJB.

The amber low washer fluid indicator is subject to a 3 second bulb check when the vehicle enters power mode 6. If a low washer fluid level is detected for more than 15 seconds when the vehicle is in power mode 6, the instrument cluster will illuminate the indicator.

Low Engine Coolant Level Warning Indicator

The low engine coolant level warning indicator is illuminated on receipt of a medium speed CAN bus signal from the CJB when the vehicle is in power mode 6. The signal originates in the ECM, which transmits the signal to the CJB over the high speed CAN bus.

When the vehicle enters power mode 6, the amber low engine coolant level warning indicator is illuminated for a 3 second bulb check. If the warning indicator remains illuminated after this period, the engine cooling system should be checked for leaks and topped up as necessary.

Transmission Warning Indicator

The transmission warning indicator displays automatic transmission and active-on demand coupling warnings. The warning indicator is illuminated on receipt of medium speed CAN bus signals from the CJB. The signals originate in the Transmission Control Module (TCM) and the active-on demand coupling control module respectively and are transmitted to the CJB over the high speed CAN bus.

The transmission warning indicator is a dual color indicator, which is subject to a 3 second bulb check when the vehicle enters power mode 6. For the first 1.5 seconds of the bulb check the indicator illuminates in an amber color, followed by 1.5 seconds illuminated in a red color.

The table below details warning indicator color against message center message.

mc30.com

Message Center Message	Warning Indicator Color	
	Automatic Transmission Related Warning	Active On-demand Coupling Related Warning
TRANSMISSION FAULT	Amber	Red
TRANSMISSION FAULT AND OVERHEAT	Red	n/a
TRANSMISSION FAULT LIMITED GEARS AVAILABLE	Red	n/a
TRANSMISSION FAULT TRACTION REDUCED	n/a	Red
TRANSMISSION OVERHEAT SLOW DOWN	Amber	Red

Hill Descent Control Fault Warning Indicator

The amber Hill Descent Control (HDC) warning indicator is illuminated on receipt of medium speed CAN bus signals from the CJB . The signals originate in the ABS module and are transmitted to the CJB over the high speed CAN bus.

When the vehicle enters power mode 6, the HDC warning indicator is subject to a 3 second bulb check. If during HDC operation the HDC warning indicator illuminates it signifies that the 'fade out' strategy has been invoked due to component failure.

If the HDC warning indicator flashes it signifies that the 'fade out' strategy has been invoked due to brake system overheat. In this instance, the first flash is accompanied by a chime from the instrument cluster and the green HDC active indicator will be extinguished.
For additional information, refer to: Anti-Lock Control - Stability Assist (206-09C Anti-Lock Control - Stability Assist, Description and Operation).

Door Open Indicator

The door open indicator is illuminated on receipt of medium speed CAN bus signals from the CJB. The signals originate in the door modules, which are hardwired to the CJB. The door open indicator will illuminate in a red color if a door open signal is received by the CJB from any door module while the vehicle is in power mode 6.

Engine Management System Warning Indicator

The engine management system warning indicator is illuminated on receipt of medium speed CAN bus signals from the CJB. The signals originate in the ECM and are transmitted to the CJB over the high speed CAN bus.

The amber engine management system warning indicator is illuminated for a 3 second bulb check when the vehicle enters power mode 6. If the indicator subsequently illuminates a DTC will be logged in the ECM which should be interrogated using the Land Rover approved diagnostic system.

Side Lamp Indicator

The green side light indicator is illuminated on receipt of a medium speed CAN bus signal from the CJB. The signal originates in the light switch module and is transmitted to the CJB over the Local Interconnect Network (LIN) bus. The instrument cluster will only illuminate the side lamp indicator when the vehicle is in power mode 6.

Dynamic Stability Control Indicator

The Dynamic Stability Control (DSC) indicator is illuminated by the instrument cluster on receipt of medium speed CAN bus signals from the CJB. The signal originates in the ABS module. The indicator is illuminated in an amber color for 3 seconds for a bulb check when the vehicle enters power mode 6. If no faults exist, the indicator is extinguished after the bulb check period.

When DSC is active, the indicator flashes to inform the driver that the system is regulating engine output and braking forces. If the indicator remains illuminated after the bulb check period or illuminates when driving, the DSC system has a fault or DSC has been deselected by the driver using the DSC switch on the floor console.

Hill Descent Control Active Indicator

The HDC active indicator is illuminated by the instrument cluster on receipt of medium speed CAN bus signals from the CJB. The signal originates in the ABS module. The indicator is illuminated in a green color when HDC is active and the vehicle speed is below a predetermined threshold. If the vehicle speed is faster than the threshold limit, the HDC indicator will flash until the vehicle speed is reduced. On high line instrument clusters a supporting message will also be displayed in the message center. For additional information, refer to:

> Anti-Lock Control - Stability Assist (206-09C Anti-Lock Control - Stability Assist, Description and Operation),
> Information and Message Center (413-08 Information and Message Center, Description and Operation).

If the use of HDC causes the brake discs to exceed their pre-determined temperature, the HDC system initiates a 'fade out'. The HDC indicator flashes during 'fade out' and on high line instrument clusters a supporting message is displayed in the message center. When the brake discs have cooled sufficiently, HDC is reactivated and the HDC indicator is permanently illuminated.

Anti-theft Alarm Indicator

The anti-theft alarm indicator is controlled directly from the CJB via a hardwired connection. There is no software functionality within the instrument cluster to control operation of the anti-theft alarm indicator.
For additional information, refer to: Anti-Theft - Active (419-01A Anti-Theft - Active, Description and Operation).

Glow Plug Indicator

The glow plug indicator is illuminated on receipt of a medium speed CAN bus signal from the CJB. The signal originates in the diesel ECM and indicates the glow plugs are operational. The indicator will illuminate in an amber color when the vehicle enters power mode 6 and a glow plugs active signal is received from the ECM. When the combustion pre-heat procedure has been carried out, the ECM informs the instrument cluster to extinguish the glow plug indicator.

For additional information, refer to: Electronic Engine Controls - 2.2L Diesel (303-14 Electronic Engine Controls - 2.2L Diesel, Description and Operation).

Overspeed Warning Indicator

The amber overspeed warning indicator is illuminated on receipt of a medium speed CAN bus signal from the CJB when the vehicle is in power mode 6. The vehicle speed signal originates in the ABS module and is the same as that used by the speedometer (see above).

The instrument cluster will flash the overspeed warning indicator at a rate of 2 Hz for 5 seconds if a speed of greater than 75 mph (120 kph) is reached. The first flash of the indicator will be accompanied by a chime from the instrument cluster. If the vehicle stays at this speed, the indicator will remain illuminated after the 5 second flashing period. The instrument cluster will extinguish the indicator if vehicle speed drops below 71 mph (114 kph).

Stop/Start Vehicles - From 2010 MY

E115193

Eco 'Stop/Start' Indicator

The TD4_e introduces the first intelligent 'Stop/Start' system into a Land Rover vehicle. The system automatically shuts down and restarts the vehicle's engine when the appropriate conditions are satisfied. This reduces the amount of time the engine spends idling, thereby improving fuel economy and reducing emissions. The driver will be notified that the engine is shutdown by the 'Eco' icon being illuminated in the instrument cluster. Other warning lights normally associated with an engine shutdown, for example the ignition and low oil pressure indicators are suppressed so will not illuminate during an engine shutdown in a Stop/Start cycle.
For additional information, refer to: Starting System (303-06C Starting System - TD4 2.2L Diesel, Vehicles Built From: 01-03-2009, Description and Operation).

E115184

Eco Switch

The Stop/Start system is automatically activated each time an ignition cycle occurs. However, the driver can deactivate the system by pressing the 'Eco' switch in the fascia.
For additional information, refer to: Starting System (303-06C Starting System - TD4 2.2L Diesel, Vehicles Built From: 01-03-2009, Description and Operation).

The Eco switch also operates the Gear Shift Indicator; for additional information refer to Gear Shift Indicator section, below.

CAR CONFIGURATION FILE

The car configuration file contains all relevant data about the specification and market condition of the vehicle, immobilization codes and driver personal settings. The master repository for this information is the CJB, with a back up being held in the instrument cluster. The information is continuously transferred between the 2 components to ensure the data is constantly backed-up.

CAUTION: When a new instrument cluster is to be installed, the Land Rover approved diagnostic system must be connected to the vehicle and the instrument cluster renewal procedure followed. This will ensure that vehicle coding data is correctly installed in the new instrument cluster. The Land Rover approved diagnostic system will also record the current

service interval data and restore the settings in the new instrument cluster.

When a new instrument cluster is installed, the Land Rover approved diagnostic system is used to transfer the car configuration file data from the CJB to the replacement instrument cluster. Vehicle coding data such as engine type and market is retrieved and used to update the replacement instrument cluster.

The car configuration file will also need to be updated using the Land Rover approved diagnostic system if the vehicle is modified in service from its original factory specification. This can include fitting non-standard wheels and/or tires, or optional accessory dealer fit components with an electrical interface.

GEAR SHIFT INDICATOR - FROM 2010 MY

OVERVIEW

A Gear Shift Indicator in the instrument cluster illuminates to advise the driver when to select a higher gear to attain better fuel efficiency from the vehicle. If the indicator is obeyed the driver can achieve fuel savings of up to 5%.

Gear shift indicator

Introduced in the manual transmission vehicle as standard, the Gear Shift Indicator is automatically activated each time an ignition cycle occurs. However, the driver can deactivate the indicator by pressing the 'Eco' switch on the fascia.

• NOTE: The 'Eco' switch also operates the Stop/Start system.

For additional information, refer to: Starting System (303-06C Starting System - TD4 2.2L Diesel, Vehicles Built From: 01-03-2009, Description and Operation).

Eco switch

The Gear Shift Indicator illuminates to advise the driver to select a higher gear, the indicator depending on driver action and driving conditions behaves as follows:

- Extinguishes when a higher gear is selected.
- Extinguishes before a higher gear is selected if driver demand or driving conditions change.
- Extinguishes after 12 seconds if the indicator is ignored; either of the two following conditions can reset the indicator:
  - the driver makes a further gear selection,
  - the driver accelerates after exiting a sharp corner.

The Gear Shift Indicator is designed only to assist the driver, gear selection remains the driver's decision based on other driving conditions affecting the vehicle.

The Gear Shift Indicator:

- Does not advise when to select a lower gear.
- Cannot predict the gradient or curvature of the road ahead.

CONTROL DIAGRAM

mcx30.com

Gear Shift Indicator Control Diagram

• NOTE: **A** = Hardwired; **D** = High Speed CAN bus; **N** = Medium Speed CAN bus.

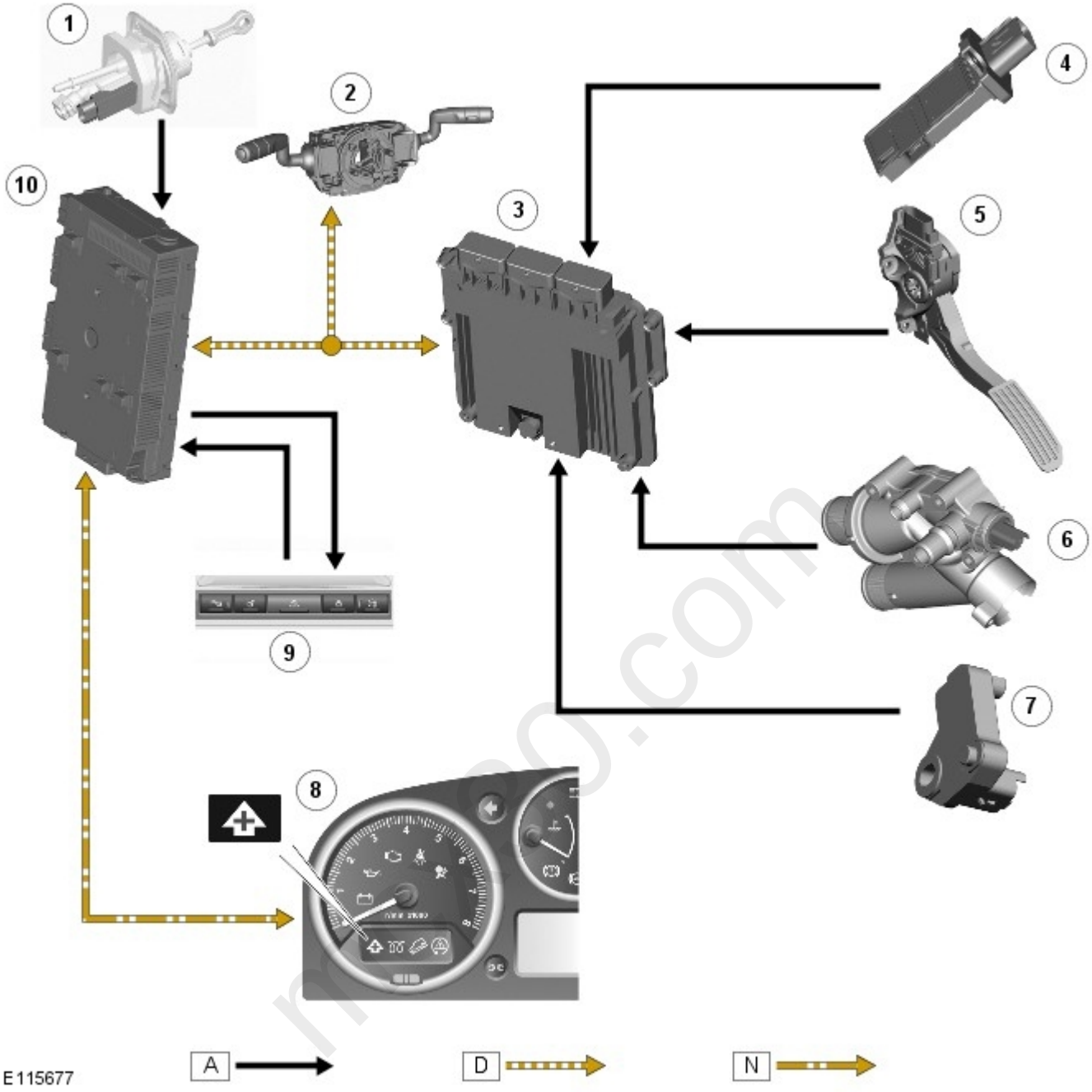

Item	Part Number	Description
1	-	Linear clutch sensor
2	-	Steering wheel module including steering angle sensor
3	-	Engine control module
4	-	Mass air flow sensor / Intake air temperature sensor
5	-	Accelerator pedal position sensor
6	-	Coolant temperature sensor
7	-	Crankshaft position sensor
8	-	Instrument cluster
9	-	Eco switch
10	-	Central junction box

PRINCIPLES OF OPERATION

The Gear Shift Indicator takes advantage of the fully mapped engine to continually calculate the engines performance and whether a higher gear would provide improved fuel efficiency. The ECM (engine control module) interprets which gear is currently selected from analysis of the following EEC (electronic engine control) component inputs:

- Engine load; input from the MAF (mass air flow) sensor.
- Driver's accelerator position and demand; input from the APP (accelerator pedal position) sensor.
- Engine temperature; input from the coolant temperature sensor.
- Engine speed; input from the CKP (crankshaft position) sensor.
- Vehicle speed; input from the ECM via signals from the ABS (anti-lock brake system) module on the high-speed CAN (controller area network).

Using these inputs the ECM uses an algorithm to monitor the driver's torque and performance demand in the current gear to establish if the same torque and performance could be achieved in the next highest gear to improve fuel efficiency, without introducing engine laboring.

The signal from the Steering Angle Sensor is used to inhibit illumination of the Gear Shift Indicator when the vehicle is traveling round a bend in the road.

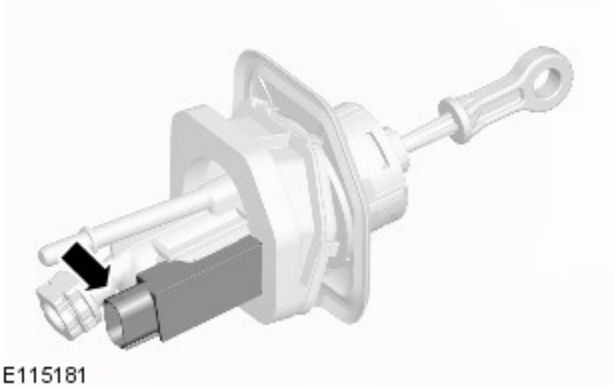

Linear clutch sensor

The linear clutch sensor a component introduced with the Stop/Start system is used to reset the indicator lamp each time a gear change is executed.
For additional information, refer to: Starting System (303-06C Starting System - TD4 2.2L Diesel, Vehicles Built From: 01-03-2009, Description and Operation).

The two existing clutch position-switches located on the clutch pedal housing and used as inputs for various vehicle systems, are also used by the Gear Shift Indicator system for plausibility checks.

• NOTE: The Gear Shift Indicator will not function if there is fault with the Stop/Start system.

For additional information, refer to: Starting System (303-06C Starting System - TD4 2.2L Diesel, Vehicles Built From: 01-03-2009, Description and Operation).

mcx30.com

Published: 11-May-2011

Instrument Cluster - Instrument Cluster

Diagnosis and Testing

Principles of Operation

For a detailed description of the Instrument Cluster, refer to the relevant Description and Operation section in the workshop manual.
REFER to: Instrument Cluster (413-01 Instrument Cluster, Description and Operation).

Inspection and Verification

CAUTION: Diagnosis by substitution from a donor vehicle is **NOT** acceptable. Substitution of control modules does not guarantee confirmation of a fault, and may also cause additional faults in the vehicle being tested and/or the donor vehicle.

1. **1.** Verify the customer concern.
2. **2.** Visually inspect for obvious signs of mechanical or electrical damage and system integrity.

Visual Inspection

Mechanical	Electrical
• Fluid levels • Accessory installations	• Fuse • Wiring harness • Electrical connectors • Instrument cluster • Central Junction Box (CJB) • Engine Control Module (ECM)

3. **3.** If an obvious cause for an observed or reported concern is found, correct the cause (if possible) before proceeding to the next step
4. **4.** If the cause is not visually evident, check for Diagnostic Trouble Codes (DTCs) and refer to the DTC Index.

DTC Index

• NOTE: If the control module or a component is suspect and the vehicle remains under manufacturer warranty, refer to the Warranty Policy and Procedures manual (section B1.2), or determine if any prior approval programme is in operation, prior to the installation of a new module/component.

• NOTE: Generic scan tools may not read the codes listed, or may read only five digit codes. Match the five digits from the scan tool to the first five digits of the seven digit code listed to identify the fault (the last two digits give extra information read by the manufacturer-approved diagnostic system).

• NOTE: When performing voltage or resistance tests, always use a digital multimeter (DMM) accurate to three decimal places and with a current calibration certificate. When testing resistance, always take the resistance of the DMM leads into account.

• NOTE: Check and rectify basic faults before beginning diagnostic routines involving pinpoint tests.

• NOTE: If DTCs are recorded and, after performing the pinpoint tests, a fault is not present, an intermittent concern may be the cause. Always check for loose connections and corroded terminals.

REFER to: Diagnostic Trouble Code (DTC) Index - DTC: Instrument Cluster (IPC) (100-00 General Information, Description and Operation).

mcxec.com

Published: 11-May-2011

Instrument Cluster - Instrument Cluster

Removal and Installation

Removal

• NOTE: When a new instrument cluster is to be installed, the Land Rover approved diagnostic system must be connected to the vehicle and the instrument cluster renewal procedure followed. This will allow vehicle coding data and current service interval data to be correctly installed to the new instrument cluster.

• NOTE: Removal steps in this procedure may contain installation details.

1. Make the SRS system safe.

   Refer to: Standard Workshop Practices (100-00 General Information, Description and Operation).

2. Remove the driver lower air bag module.

   Refer to: Driver Lower Air Bag Module (501-20B Supplemental Restraint System, Removal and Installation).

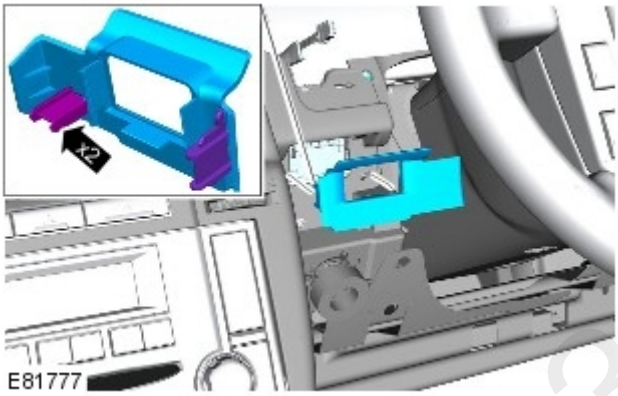

3. **3.** NOTE: RHD illustration shown, LHD is similar.

   Remove the keyless start control module trim cover.

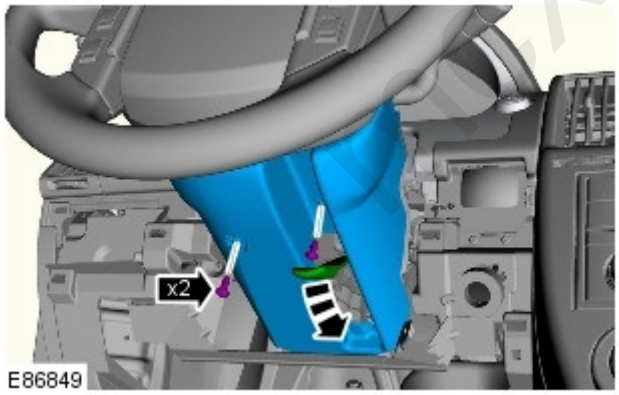

4. Remove the steering column lower cowl.

5. Adjust the steering column to its lowest position.

6.

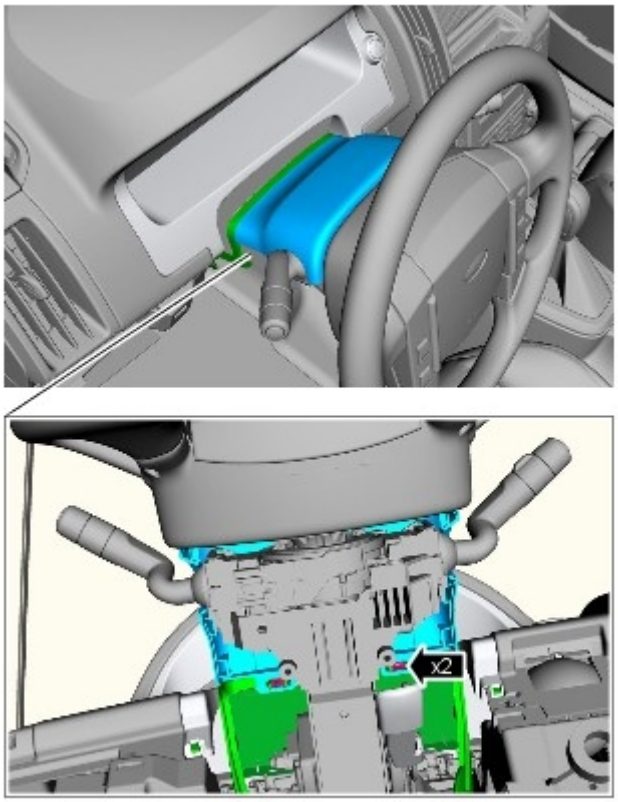

E86851

7. **7.** NOTE: Take extra care when releasing the clips.

   Remove the instrument cluster surround.

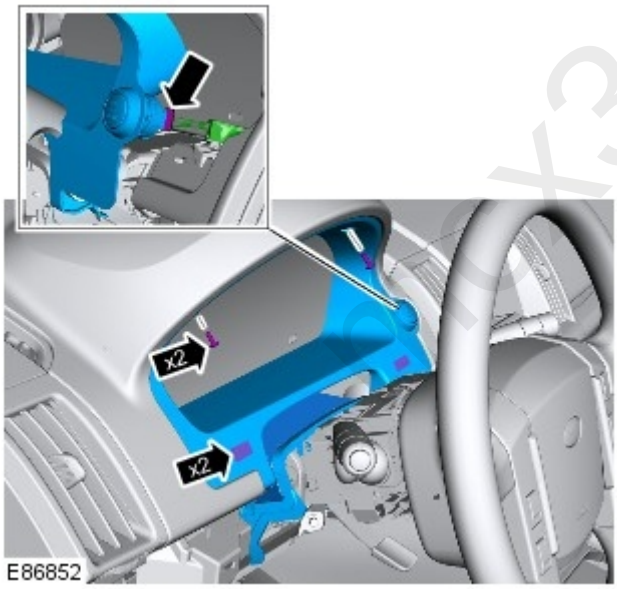

E86852

mx30.com

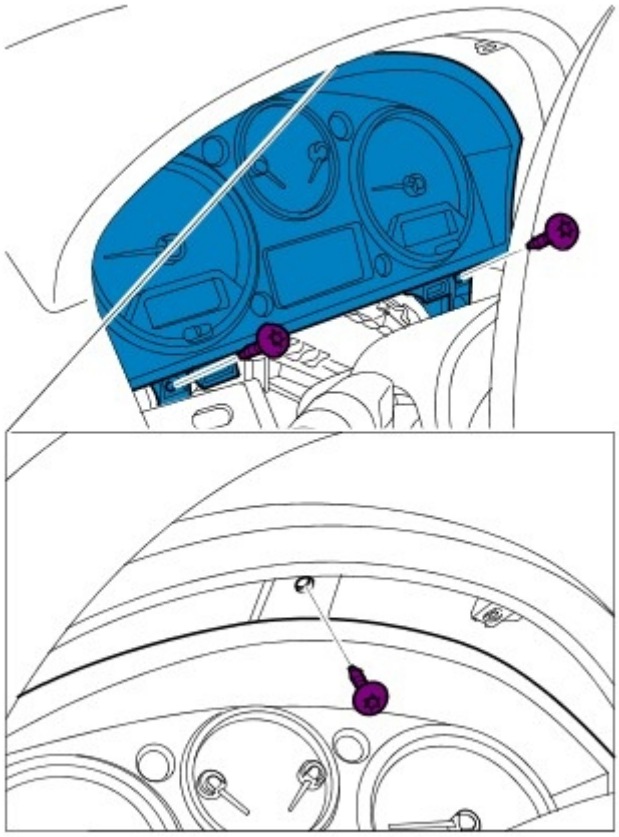

E77263

8.

- Remove the 3 Torx screws.

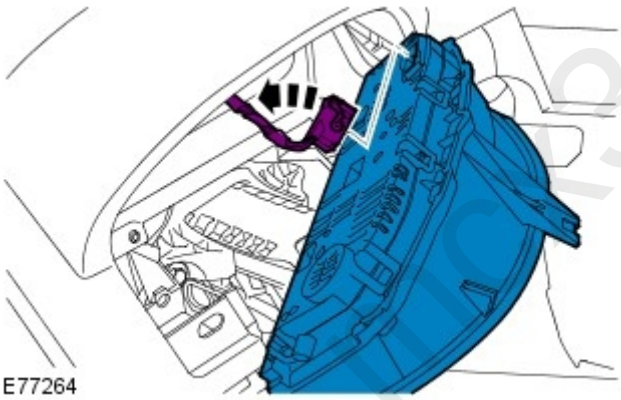

E77264

9.

Installation

1. To install, reverse the removal procedure.
2. If a new component has been installed, configure using Land Rover approved diagnostic equipment.

mk30.com